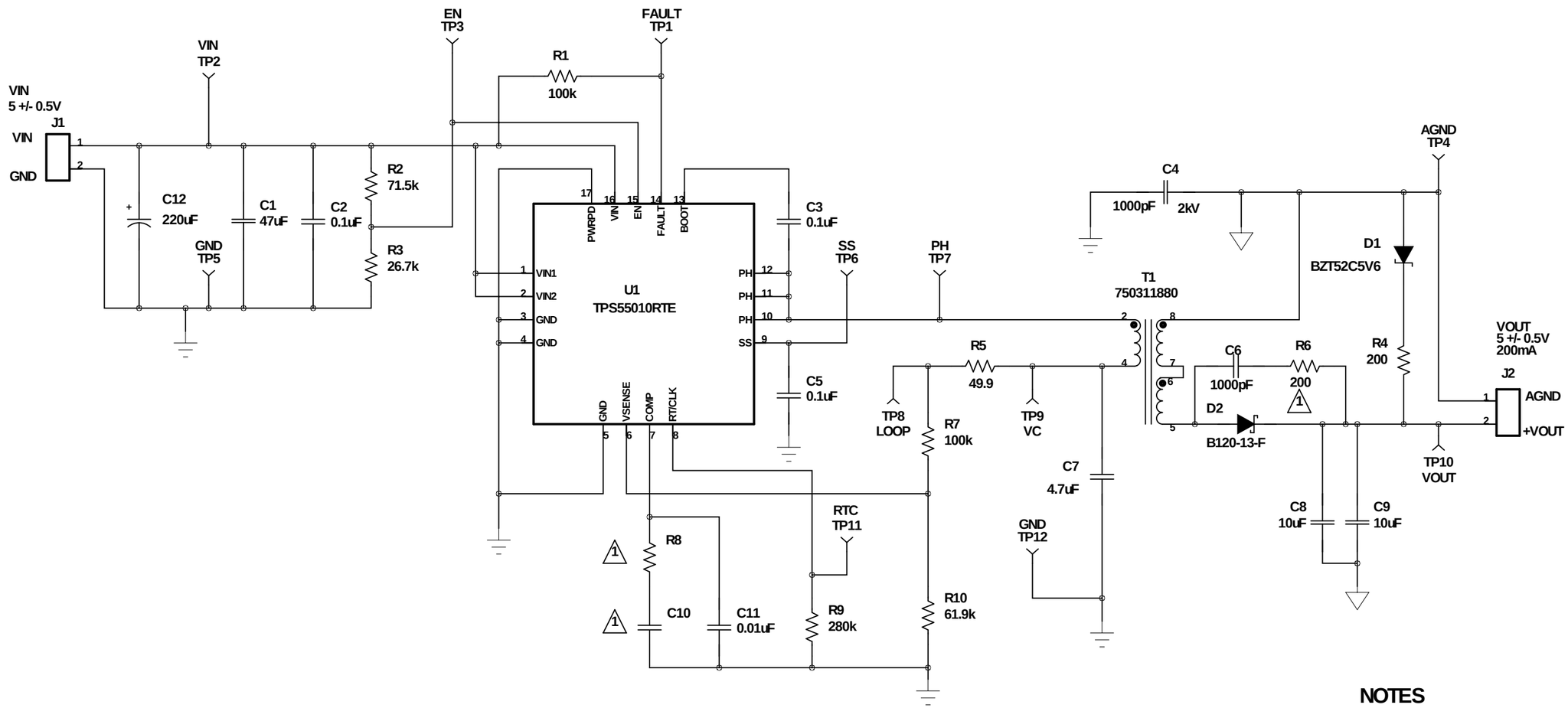

NOTES

1. Not Installed

Texas Instruments

Title	TPS55010EVM-009	
Size: B	Number: PWR009	Rev: A
Date: 4/11/11		Drawn by: E. Wright
Engineer: E. Wright	Filename: PWR009A.sch	Sheet 1 of 2

4/11/11