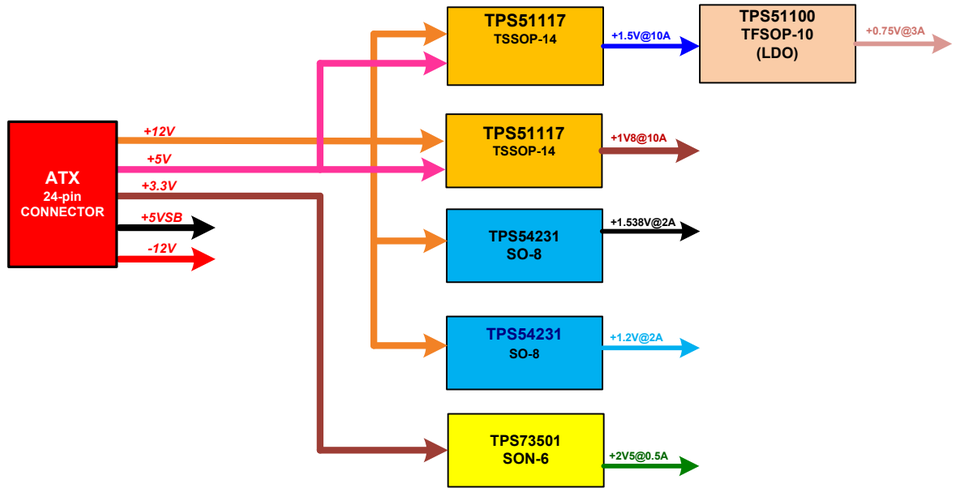
ATX
24-pin
CONNECTOR
+12V
+5V
+3.3V
+5VSB
-12V
TPS51117
TSSOP-14
+1.5V@10A
TPS51100
TFSOP-10
(LDO)
+0.75V@3A
TPS51117
TSSOP-14
+1V8@10A
TPS54231
SO-8
+1.538V@2A
TPS54231
SO-8
+1.2V@2A
TPS73501
SON-6
+2V5@0.5A