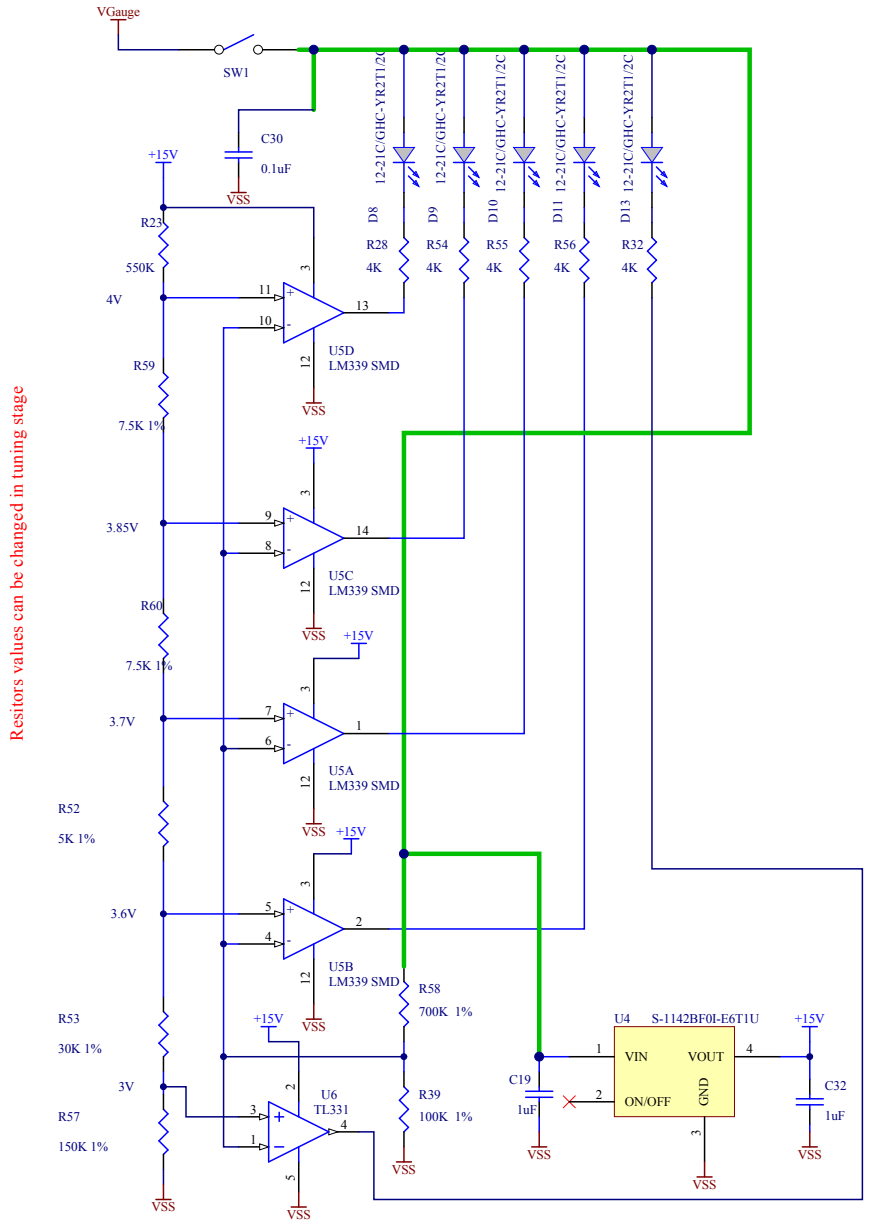

Resitors values can be changed in tuning stage

Title		
Size B	Number	Revision
Date: 7/5/2013	Sheet of	
File: C:\Users\..\Gauge.SCH	Drawn By:	

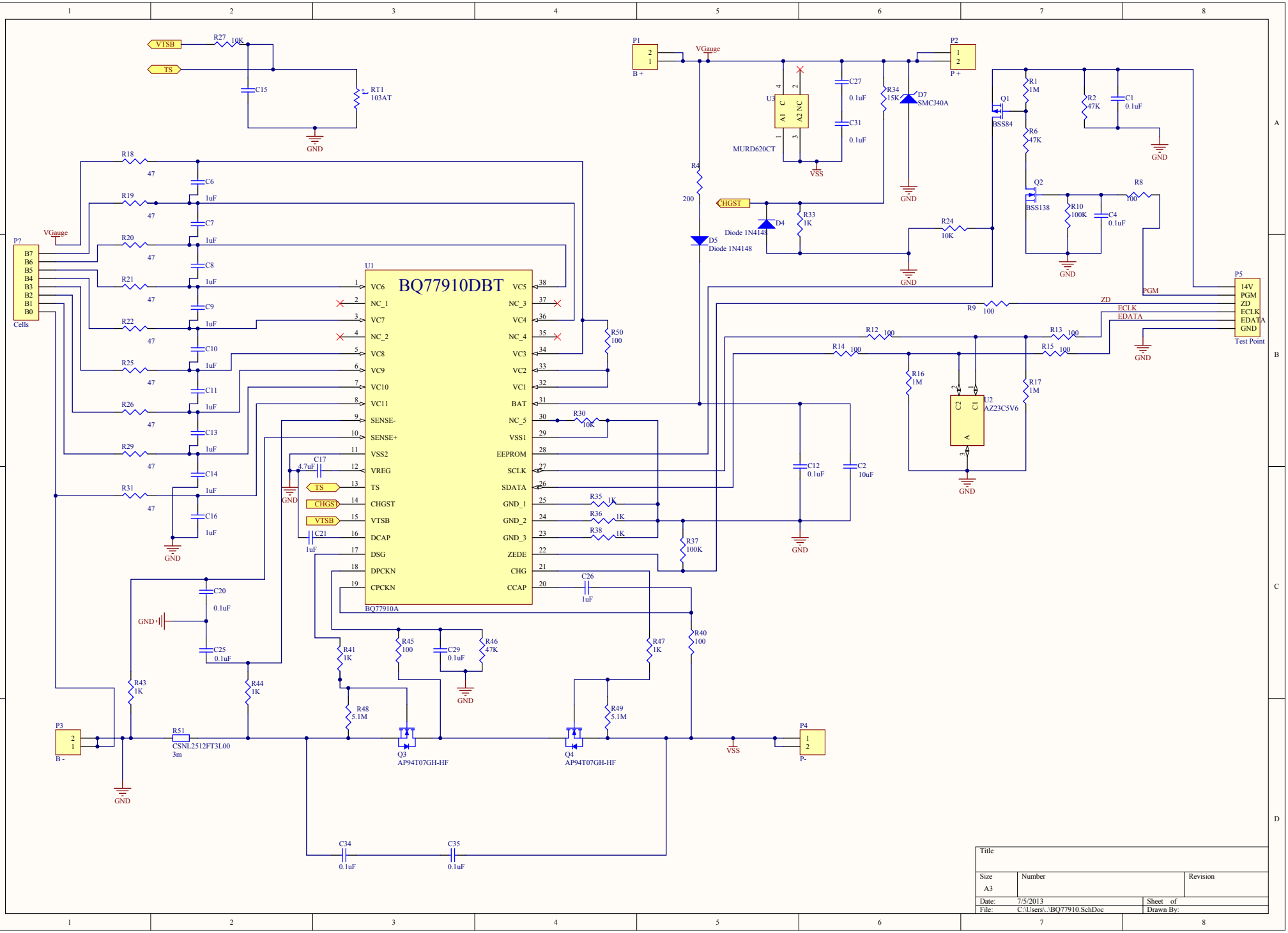

Title		
Size A3	Number	Revision
Date: 7/5/2013	Sheet of	
File: C:\Users\..\BQ77910.SchDoc	Drawn By:	