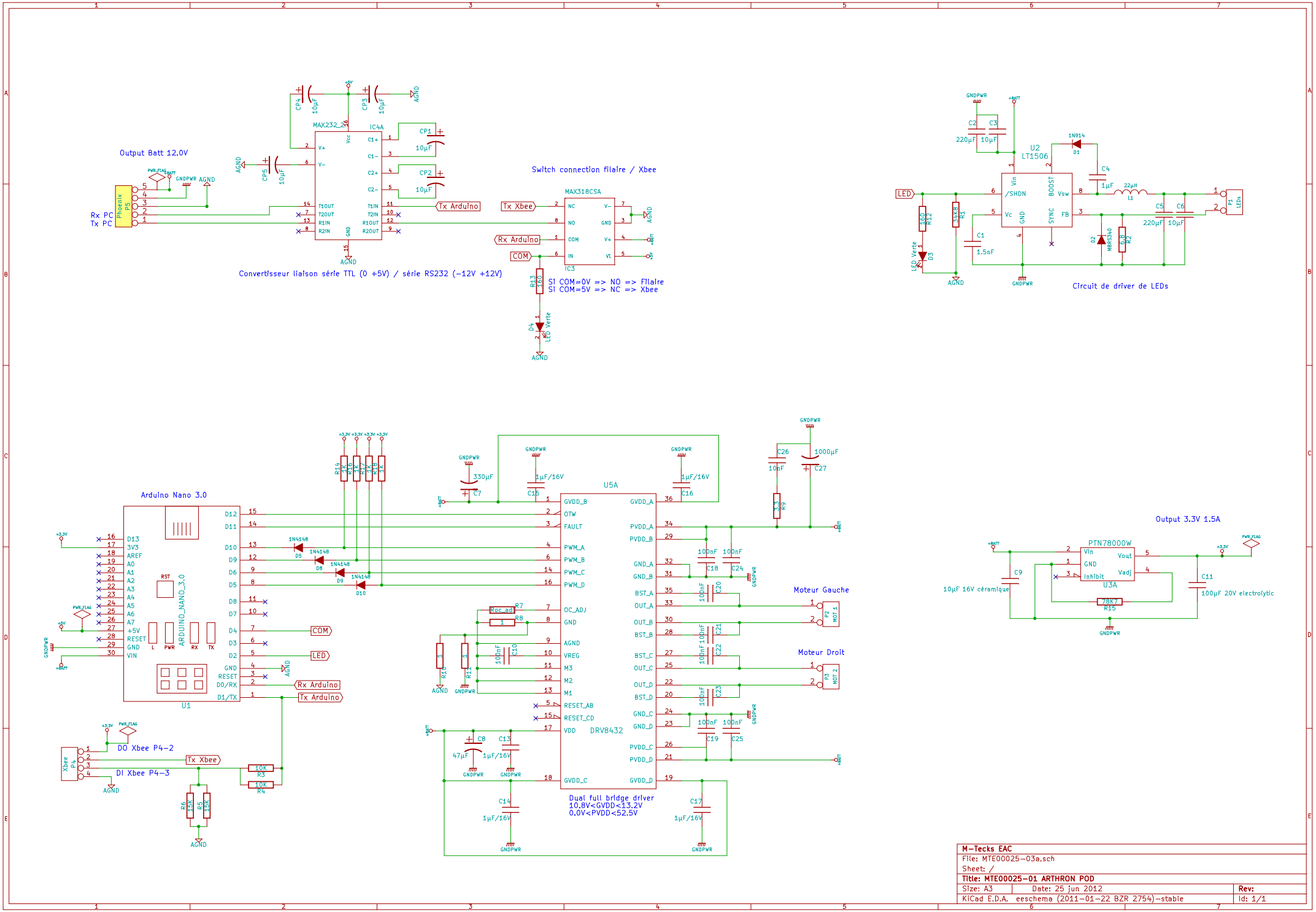

M-Tecks EAC		
File: MTE00025-03a.sch		
Sheet: /		
Title: MTE00025-01 ARTHRON POD		
Size: A3	Date: 25 jun 2012	Rev:
KiCad E.D.A. eeschema (2011-01-22 BZR 2754)-stable		Id: 1/1