0 Replies
1 Subscriber
21 Views
Posted 12 hours ago

Welcome to the Low Power RF & Wireless Connectivity Section of the TI E2E Support Community. Ask questions, share knowledge, explore ideas, and help solve problems with fellow engineers. To post a question, click on the forum tab then "New Post".

Get this RSS feed

Options

Subscribe via RSS

Home | Announcements | **Forums** | Files | Design Notes

New Post

NOT TUNING RFID ANTENNA

Posted by RAGHU KUMAR1 on Sep 28, 2012 1:52 PM
Community Member Prodigy 10 points

msp2370_RFID_schl.pdf

Hi all,

pls find RFID TRF7870A schematic as attachment. By this schematic we have divided two PCB BOARDS one for main board and another for antenna board. my problem is not getting signal and antenna is not tuning. can any one provide reason why antenna is not tuning....

Reply

Share

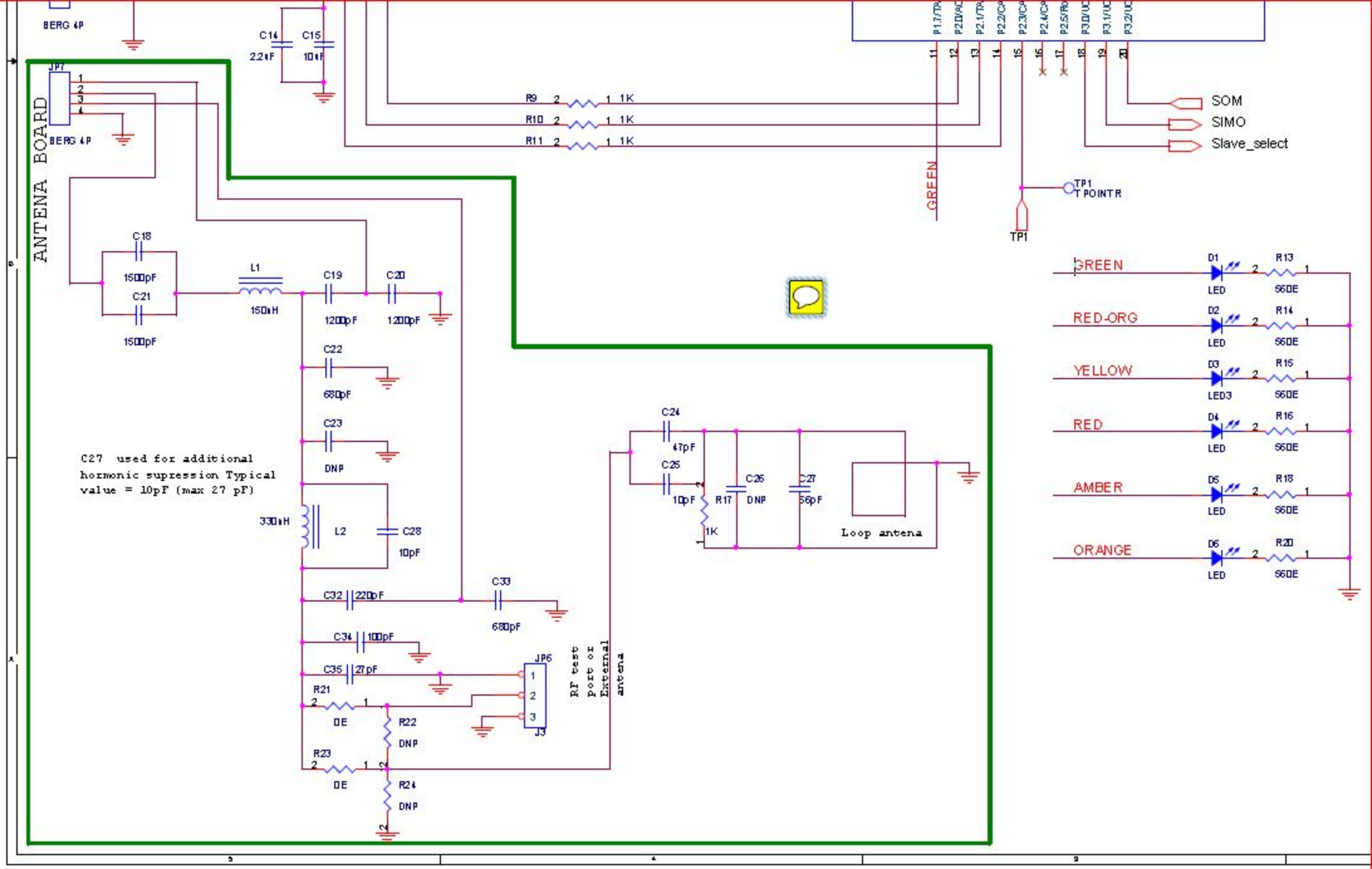
ANTENA BOARD
BERG 4P
JP7
C14
2.2uF
C15
10uF
R9 2 1 1K
R10 2 1 1K
R11 2 1 1K
GREEN
SOM
SIMO
Slave_select
TP1
TPOINTR
C18
1500pF
C21
1500pF
L1
150uH
C19
1200pF
C20
1200pF
C22
680pF
C23
DNP
C27 used for additional
hormonic supression Typical
value = 10pF (max 27 pF)
330uH
L2
C28
10pF
C32 220pF
C33
680pF
C34 100pF
C35 27pF
JP6
J3
RF test
port or
External
antena
R21
0E
R22
DNP
R23
0E
R24
DNP
C24
47pF
C25
10pF
R17
1K
C26
DNP
C27
56pF
Loop antena
GREEN
RED-ORG
YELLOW
RED
AMBER
ORANGE
D1
D2
D3
D4
D5
D6
LED
LED3
R13
R14
R15
R16
R18
R20
560E

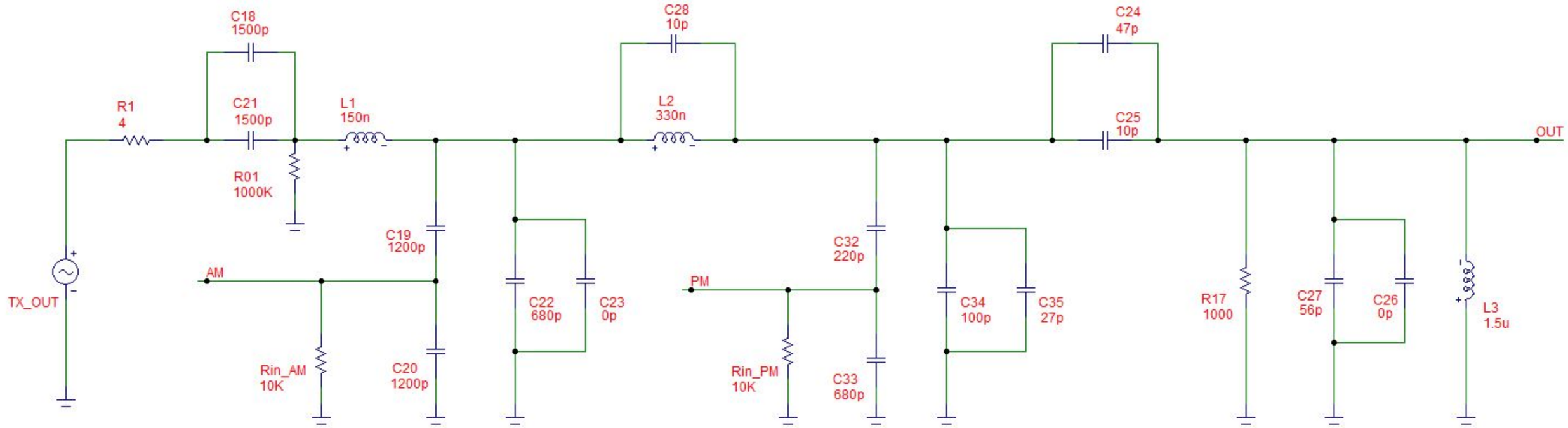

e2e
Rhagu Kumari
msp2370_RFID_sch1.pdf
Sept28 2012 1:52
...
Spice Simulation by Ray Seidel

note 1: I set the driving source resistance to 4 ohms (8 ohms does change things a little)
note 2: check your values for ... C27=56pF(68pF), R17=1k(6.8K),C24=47pF(12pF),C25=10pF(12pF)
note 3: your note reference C27 says 10pF..47pF, you are using 56pF =?
note 4: are you speaking of harmonics of 13.56Mhz (27.12MHz..40.68MHz...)
note 5: BEWARE THE HUGE RECEIVER SPURIOUS PEAK AT 18.43mhZ (both receive channels)
note 6: observe the lower plot, it is of CURRENT in L3 when Transmitting = emitted flux

Page 1 | Text | Models | Info

Raghu Kumari 01.CIR

Raghu Kumari 01.CIR

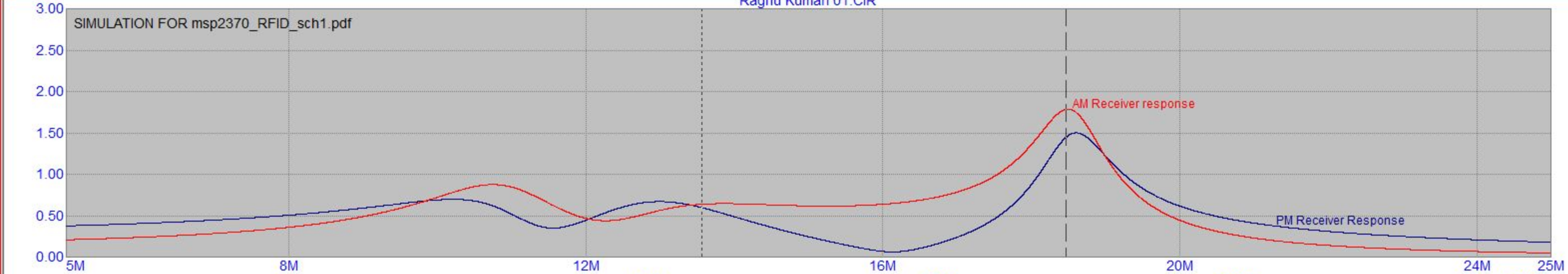

	Left	Right	Delta	Slope
V(AM) (V)	596.472m	1.446	849.598m	173.178n
V(PM) (V)	637.900m	1.785	1.147	233.765n
F (Hz)	13.562M	18.468M	4.906M	1.000

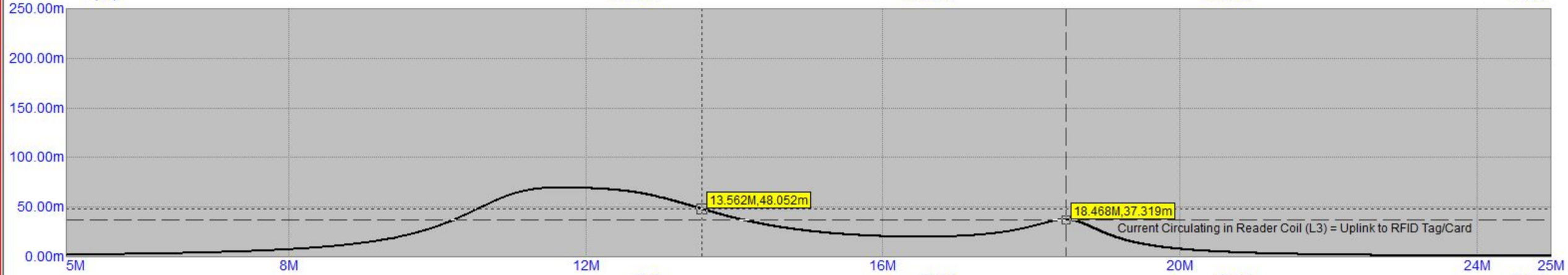

	Left	Right	Delta	Slope
i(L3) (A)	48.052m	37.319m	-10.733m	-2.188n
F (Hz)	13.562M	18.468M	4.906M	1.000

Main

AC Analysis | Raghu Kumari 01.CIR

4.1.2 Schematic

Figure 4-1 shows a sample application schematic for a parallel MCU interface.

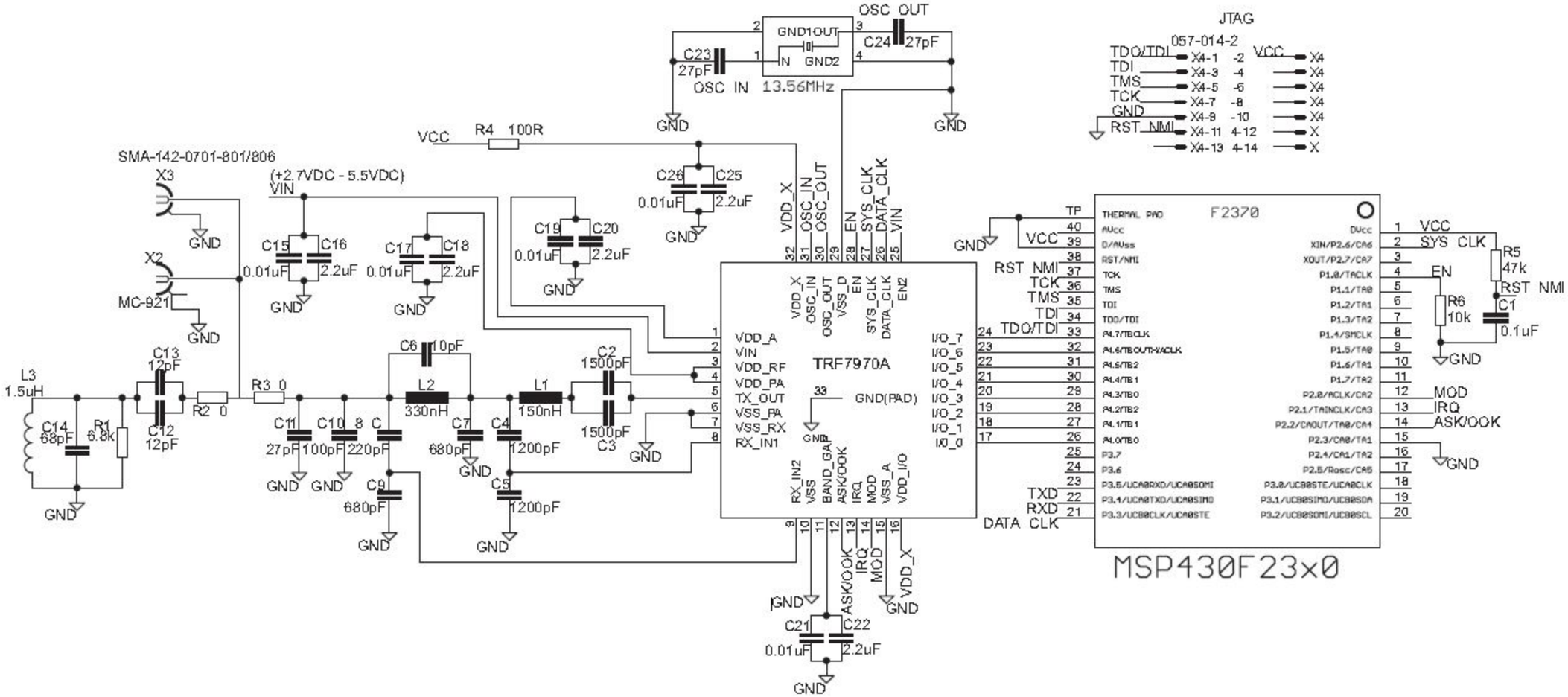

Figure 4-1. Application Schematic – Parallel MCU Interface

An MSP430F2370 (32kB Flash, 2kB RAM) is shown in Figure 4-1. Minimum MCU requirements depend on application requirements and coding style. If only one ISO protocol or a limited command set of a

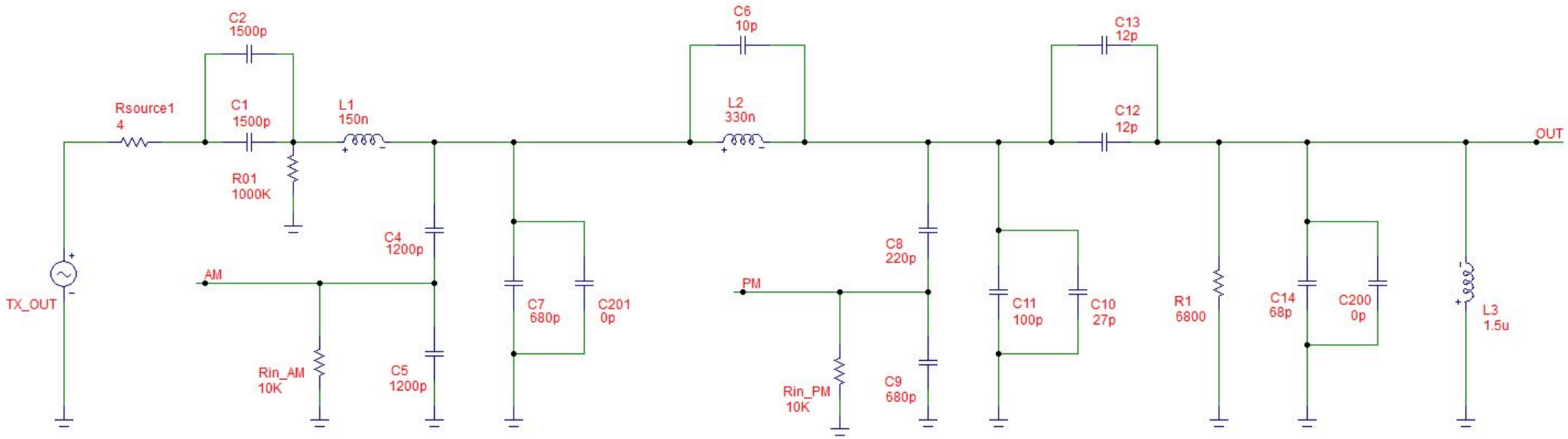

TI Application Schematic
trf7970a.pdf
Fig 4.1
page 13

note1: Set Source impedance to (4+j0)...high power ?
note2: antenna coli L3 = 1.5uH
note3: component numbering as per Fig4.1
note4: OBSERVE TI ENGINEERING PRECISION IN RESONATING THESE VALUES TO 13.56MHz...not bad

Page 1 | Text | Models | Info

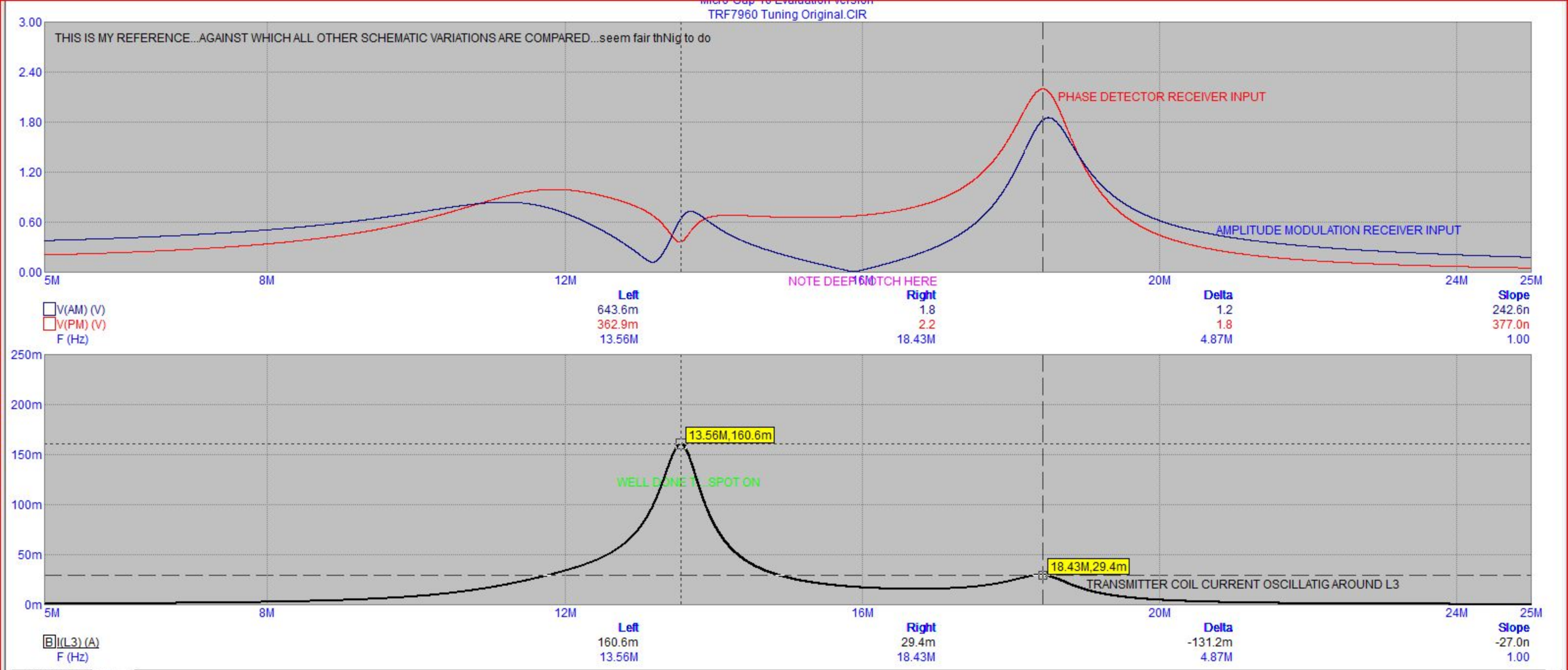
Micro-Cap 10 Evaluation Version
TRF7960 Tuning Original.CIR
THIS IS MY REFERENCE...AGAINST WHICH ALL OTHER SCHEMATIC VARIATIONS ARE COMPARED...seem fair thNig to do
PHASE DETECTOR RECEIVER INPUT
AMPLITUDE MODULATION RECEIVER INPUT
NOTE DEEP NOTCH HERE
3.00
2.40
1.80
1.20
0.60
0.00
5M
8M
12M
16M
20M
24M
25M
Left
Right
Delta
Slope
V(AM) (V) 643.6m 1.8 1.2 242.6n
V(PM) (V) 362.9m 2.2 1.8 377.0n
F (Hz) 13.56M 18.43M 4.87M 1.00
250m
200m
150m
100m
50m
0m
13.56M,160.6m
WELL DONE !! SPOT ON
18.43M,29.4m
TRANSMITTER COIL CURRENT OSCILLATIG AROUND L3
I(L3) (A) 160.6m 29.4m -131.2m -27.0n
F (Hz) 13.56M 18.43M 4.87M 1.00
Main

TRF7960 Tuning Original Stepping C14.CIR C14=56p

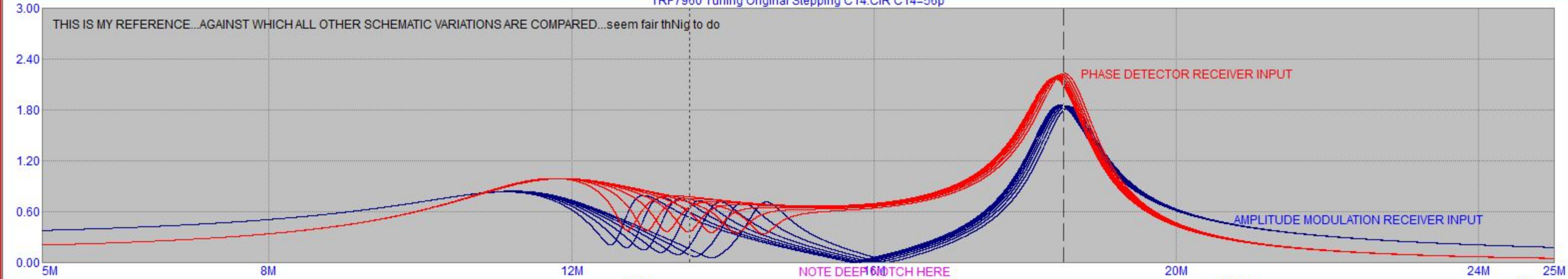

	Left	Right	Delta	Slope
V(AM) (V)	160.4m	1.8	1.6	331.3n
V(PM) (V)	744.0m	2.2	1.5	300.4n
F (Hz)	13.56M	18.51M	4.95M	1.00

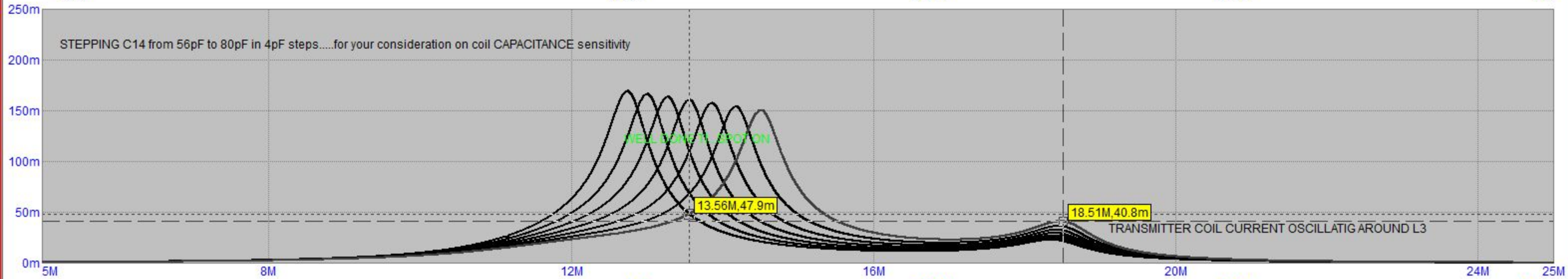

	Left	Right	Delta	Slope
I(L3) (A)	47.9m	40.8m	-7.0m	-1.4n
F (Hz)	13.56M	18.51M	4.95M	1.00

Main

TRF7960 Tuning Original Stepping L3.CIR L3=1u

THIS IS MY REFERENCE...AGAINST WHICH ALL OTHER SCHEMATIC VARIATIONS ARE COMPARED...seem fair thNig to do

PHASE DETECTOR RECEIVER INPUT

AMPLITUDE MODULATION RECEIVER INPUT

NOTE DEEP NOTCH HERE

3.00 2.40 1.80 1.20 0.60 0.00

5M 8M 12M 16M 20M 24M 25M

	Left	Right	Delta	Slope
V(AM) (V)	304.5m	1.6	1.3	256.7n
V(PM) (V)	782.1m	2.2	1.4	277.9n
F (Hz)	13.56M	18.62M	5.06M	1.00

STEPPING L3 from 1.0uH to 2.0uH in 0.1uH steps.....for your consideration on coil dimensional sensitivity

WELL DONE TL SPOT ON

18.62M,96.6m

13.56M,19.7m

TRANSMITTER COIL CURRENT OSCILLATIC AROUND L3

250m 200m 150m 100m 50m 0m

5M 8M 12M 16M 20M 24M 25M

	Left	Right	Delta	Slope
I(L3) (A)	19.7m	96.6m	76.9m	15.2n
F (Hz)	13.56M	18.62M	5.06M	1.00

Main

AC Analysis TRF7960 Tuning Original Stepping L3.CIR

Bookmarks

1 Features Common to Both TRF7960 and TRF7960A

The following features are common to both the TRF7960 and the TRF7960A.

- Pin assignments
- Terminal functions and features
- Package is a 32-pin QFN (RHB) (S-PQFP-N32) (MPQF130)
- Reference schematic/recommended layout
- ISO standards protocol support (ISO14443A/B, ISO15693)
- Basic non-ISO standard compliant protocol support (MIFARE™, FeliCa, HF EPC, etc.)

2 Background

The TRF7960 has limitations with ISO14443A and ISO14443A-like protocols, and these limitations require firmware workarounds. Resolving these limitations directly inside the TRF7960A is the primary reason for the introduction of the new device. New users implementing the ISO14443A protocol may want to consider using the TRF7960A first. Users who are already familiar with the workarounds and are in full production with the TRF7960 may consider migrating to the TRF7960A only when it makes logical sense for them. See Table 1 for details on the device limitations with the TRF7960 when using ISO14443A protocol.

Table 1. Device Limitations and Workarounds Using TRF7960 for ISO14443A Operations

Item	Issue	Workaround	Comment
1	ISO14443A decoder gives wrong data using certain data rates (106 kbps, 424 kbps and 848 kbps) and under certain hardware conditions	Switch to auxiliary receive channel and/or adjust gain.	When the analog filter overshoot is such that the digitizer produces a rising edge on the subcarrier data in a small time window the decoder will produce false data. This is rare condition and is also dependent on the output impedance matching/filter circuit. This condition is also dependant upon the resonant antenna characteristics.
2	ISO14443A anti-collision not flexible	Firmware must accommodate different results from 6 or 7 subcarrier pulses in a given bit period	Anti-collision is possible with ISO14443A, but detailed knowledge/understanding of the ISO standard is required.
3	TRF7960 does not support 4 bits replay (ACK, NCK) used by some non-ISO standard ISO14443A-like protocols	Direct Mode 0	
4	TRF7960 does not allow frames in ISO14443A Layer 4 which would start with same Select (SEL) code as anti-collision frames.(first byte = 0x93h, 0x95h or 0x97h)		

Ray

Reply

Posted by Vladimir Nohava on Sep 27, 2012 12:26 PM
Community Member Prodigy 110 points

Hello Ray,

Thanks for this info as it makes more sense to me and just re-confirms my findings. I might go with a multi-layer PCB to kind of mimic the solenoid as much as possible and round my corners. I need a rectangular shape antenna so I can maximize the field coverage as the tag moves from one side of the antenna to the other. (Parallel motion) Antenna size is about 150mmX75mm.

Problem is that when trying to maximize the number of turns of the antenna the inductance increase a lot like you stated previously. Going with a parallel or series resonance I have to keep my inductance value below around 1.5 to 2uH or else I can't match the output impedance of the 4W amplifier (50 ohm antenna). Are there other topologies I can approach so that using an inductor value higher than 2uH won't be an issue? I would like to increase the turns as much as possible. Just having 2 full turns at 150mmX75mm is already ~1.5uH.

I would like to go series resonance but that means have to re-calculate the 4W amplifier output impedance to be lower, closer to 10 ohms or less. If I'm not mistaken the output impedance of the amplifier from TI EVM is more or less 50ohms? Since the low pass and band pass filters were designed to be optimized at 50 ohms.

I have also noticed that even If I completely tuned an antenna at 50ohms my RFID carrier frequency (13.56MHz) slightly distorts but if I load a pure 50ohm resistor the output has minimal distortion.

I also designed a 6 turn spiral antenna at 100mmX100mm where it is impossible to tune the circuit to 13.56MHz at 50 ohms using parallel resonance topology. Therefore I just place a cap value to try to remove as much as possible any reactance and to my surprise this was the best result for reading distances.

Vlad

Reply