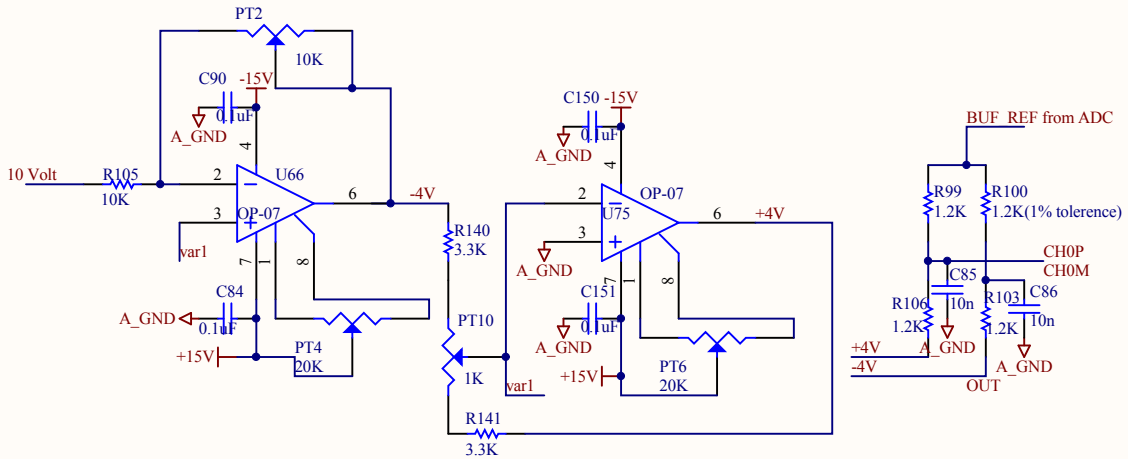

Title		
Size A4	Number	Revision
Date: 01-11-2013		Sheet of
File: H:\Sheet2.SchDoc		Drawn By: