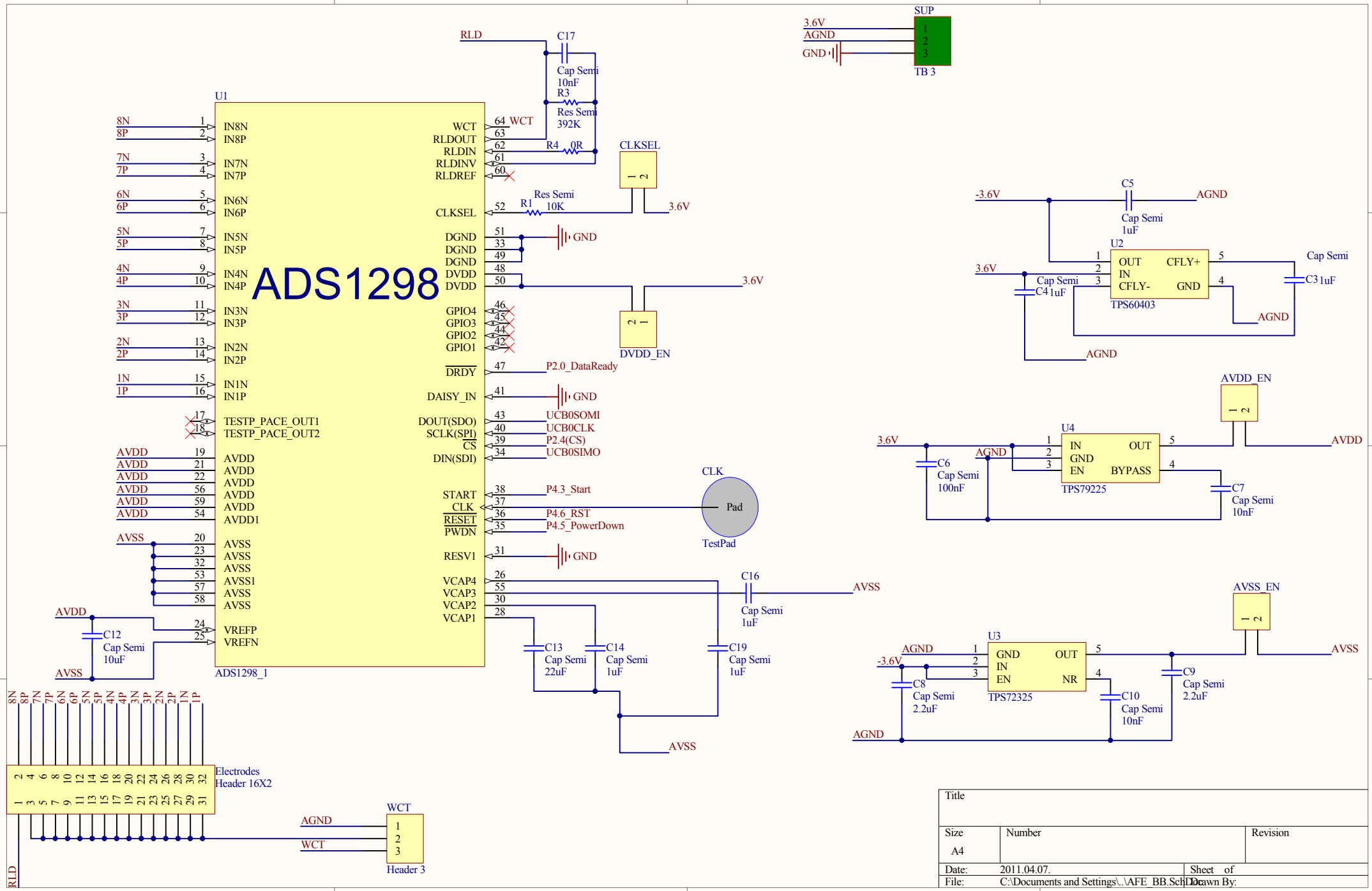
ADS1298
U1
ADS1298_1
IN8N
IN8P
IN7N
IN7P
IN6N
IN6P
IN5N
IN5P
IN4N
IN4P
IN3N
IN3P
IN2N
IN2P
IN1N
IN1P
TESTP_PACE_OUT1
TESTP_PACE_OUT2
AVDD
AVDD1
AVSS
AVSS1
VREFP
VREFN
WCT
RLDOUT
RLDIN
RLDINV
RLDREF
CLKSEL
DGND
DVDD
GPIO4
GPIO3
GPIO2
GPIO1
DRDY
DAISY_IN
DOUT(SDO)
SCLK(SPI)
CS
DIN(SDI)
START
CLK
RESET
PWDN
RESV1
VCAP4
VCAP3
VCAP2
VCAP1
RLD
C17
Cap Semi
10nF
R3
Res Semi
392K
R4 0R
R1 Res Semi 10K
CLKSEL
3.6V
GND
DVDD_EN
P2.0_DataReady
UCB0SOMI
UCB0CLK
P2.4(CS)
UCB0SIMO
P4.3_Start
P4.6_RST
P4.5_PowerDown
CLK
Pad
TestPad
C16
Cap Semi
1uF
C13
Cap Semi
22uF
C14
Cap Semi
1uF
C19
Cap Semi
1uF
C12
Cap Semi
10uF
SUP
TB 3
C5
Cap Semi
1uF
U2
OUT
IN
CFLY-
CFLY+
GND
TPS60403
C4 1uF
C3 1uF
-3.6V
AGND
AVDD_EN
U4
IN
GND
EN
OUT
BYPASS
TPS79225
C6
Cap Semi
100nF
C7
Cap Semi
10nF
AVSS_EN
U3
GND
IN
EN
OUT
NR
TPS72325
C8
Cap Semi
2.2uF
C9
Cap Semi
2.2uF
C10
Cap Semi
10nF
Electrodes
Header 16X2
WCT
Header 3
Title
Size
A4
Number
Revision
Date: 2011.04.07.
Sheet of
File: C:\Documents and Settings\..\AFE_BB.SchDoc
Drawn By: