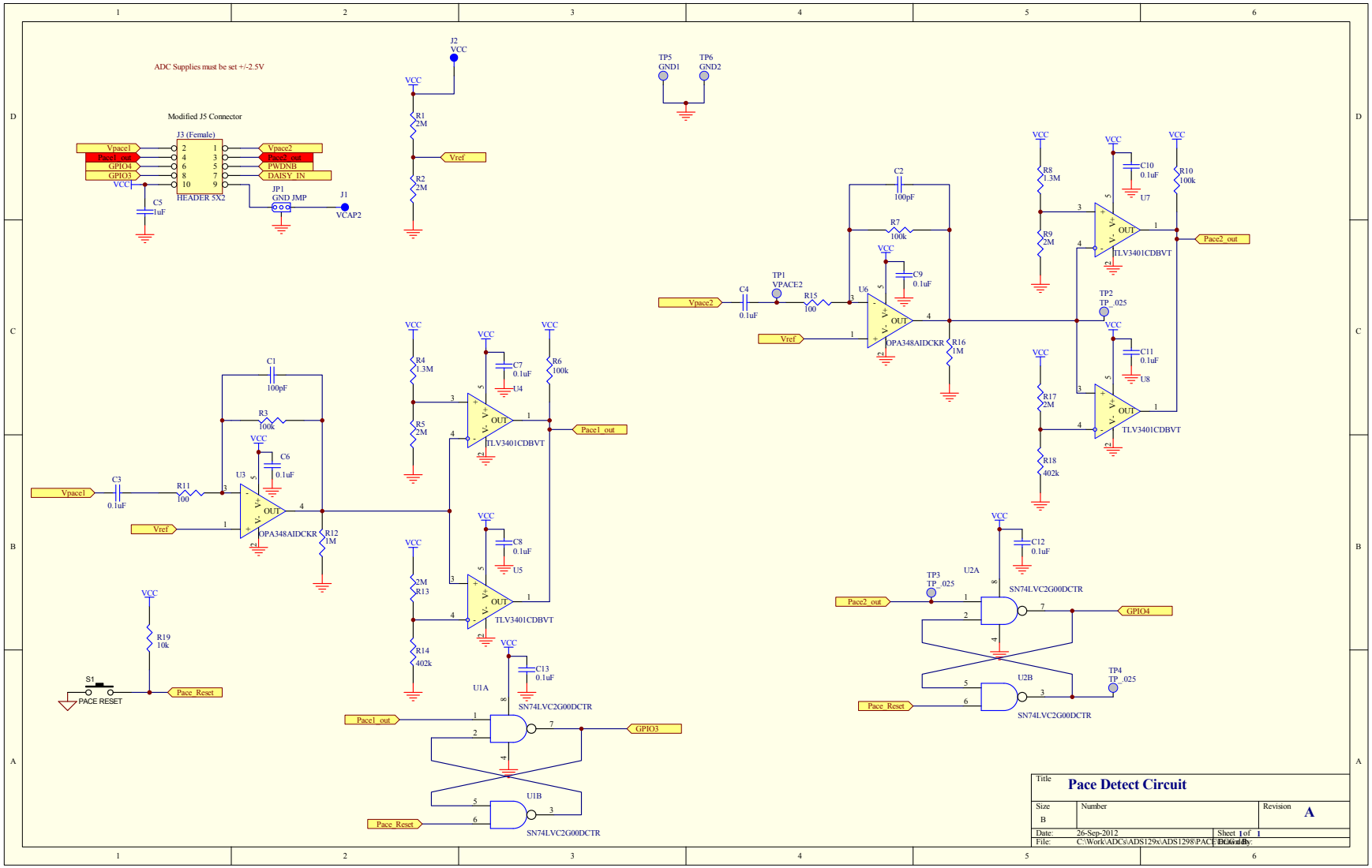
ADC Supplies must be set +/-2.5V
Modified J5 Connector
J3 (Female)
HEADER 5X2
Vpace1
Pace1_out
GPIO4
GPIO3
Vpace2
Pace2_out
PWDNB
DAISY_IN
JP1
GND JMP
J1
VCAP2
C5
1uF
J2
VCC
R1
2M
R2
2M
Vref
TP5
GND1
TP6
GND2
C1
100pF
R3
100k
C6
0.1uF
U3
OPA348AIDCKR
C3
0.1uF
R11
100
R12
1M
R4
1.3M
R5
2M
C7
0.1uF
U4
R6
100k
TLV3401CDBVT
C8
0.1uF
U5
2M
R13
R14
402k
C13
0.1uF
U1A
SN74LVC2G00DCTR
U1B
R19
10k
S1
PACE RESET
Pace_Reset
C2
100pF
R7
100k
C9
0.1uF
U6
C4
0.1uF
TP1
VPACE2
R15
100
R16
1M
R8
1.3M
R9
2M
C10
0.1uF
U7
R10
100k
TP2
TP_025
C11
0.1uF
U8
R17
2M
R18
402k
C12
0.1uF
U2A
TP3
TP_025
U2B
TP4
TP_025
Title
Pace Detect Circuit
Size
B
Number
Revision
A
Date:
26-Sep-2012
Sheet 1 of 1
File:
C:\Work\ADCs\ADS129x\ADS1298\PACE.SchDoc
Drawn By: